DRAWING NO.	999-0859-M8X125	REV.	A

REVISIONS

RELEASE	REV	DESCRIPTION	DRAWN/REV. BY	ENGINEER	DATE	APPROVALS ON FILE
ER15/068	A	RELEASE FOR PRODUCTION	J.NAVASUNDI	J.NAVASUNDI	052015	

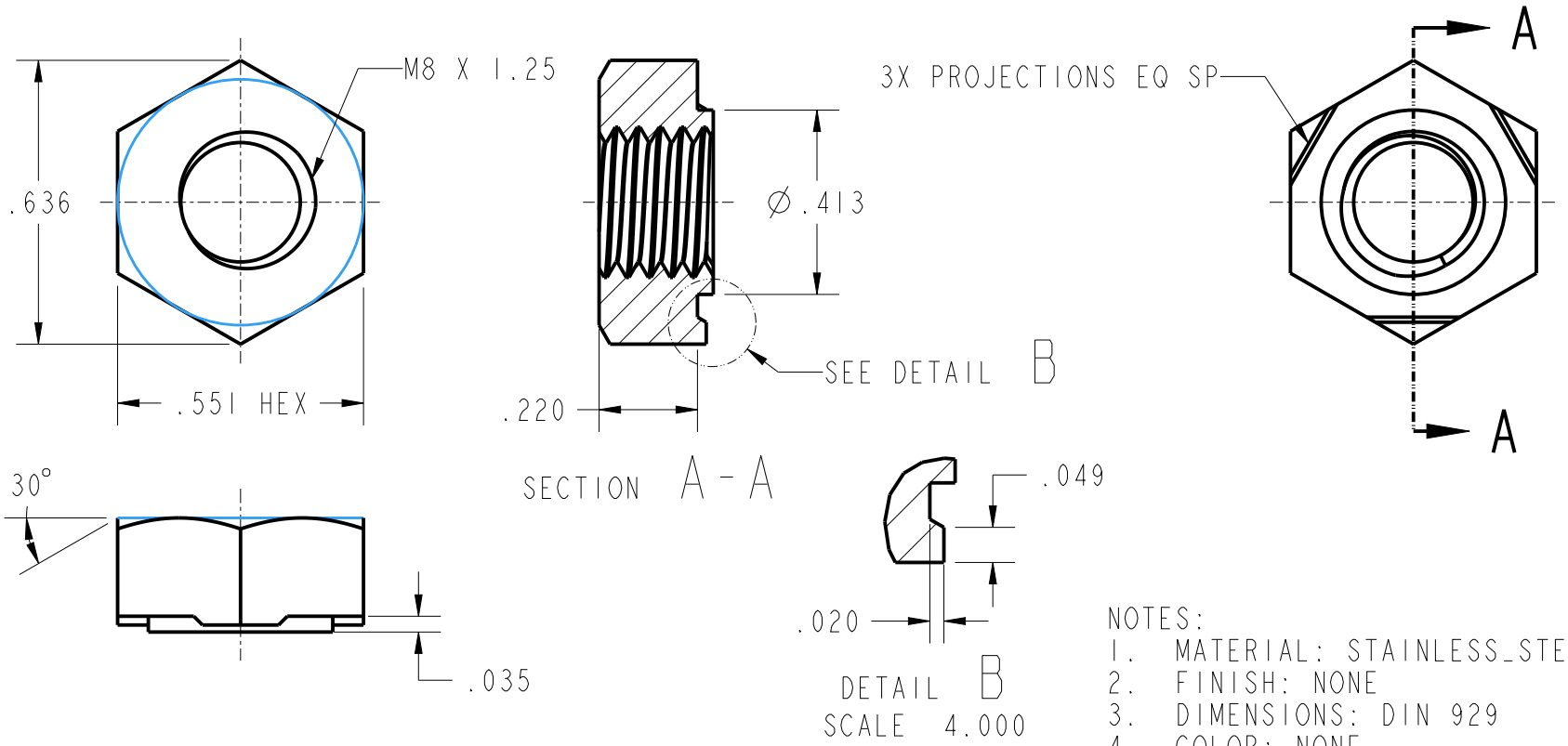

NOTES:
1. MATERIAL: STAINLESS_STEEL_18-8
2. FINISH: NONE
3. DIMENSIONS: DIN 929
4. COLOR: NONE

NOTICE OF CONFIDENTIAL INFORMATION AND PROPRIETARY RIGHTS:
THIS DOCUMENT MAY NOT BE DISCLOSED TO OTHERS EXCEPT BY EXPRESS WRITTEN PERMISSION OF SHAW DEVELOPMENT, LLC.
THIS DOCUMENT CONTAINS CONFIDENTIAL COMMERCIAL AND TECHNICAL DATA, CONCEPTS AND OTHER INFORMATION, ALL OF WHICH ARE PROPRIETARY AND OF ECONOMIC VALUE TO SHAW DEVELOPMENT, LLC.
THIS DOCUMENT MAY NOT BE USED FOR MANUFACTURE OR PROCESSING USES ABSENT EXPRESS WRITTEN PERMISSION OF SHAW DEVELOPMENT, LLC.
ANY USE OTHER THAN CONFIDENTIAL EVALUATION IS STRICTLY PROHIBITED WITHOUT THE PRIOR WRITTEN CONSENT OF SHAW DEVELOPMENT, LLC.
© 2014 Shaw Development, LLC.
All rights reserved.

TOLERANCES (UNLESS OTHERWISE NOTED)

DECIMALS	ANGLES	MM
.XX ±.030	±1/2°	.X ±.76
.XXX ±.010		.XX ±.254

REMOVE ALL BURRS AND SHARP EDGES TO .010 R MAX.

MACHINED SURFACES SHALL HAVE A 125 MICRO-FINISH OR BETTER.

UNLESS OTHERWISE SPECIFIED: DIMENSIONS ARE IN INCHES.

DIMENSIONS DESIGNATED [XX] ARE IN MILLIMETERS.

DRAWING SCALE: 2.500 SHOWN FOR REFERENCE ONLY DO NOT SCALE DRAWING

NEXT ASSY	E-JOB 3455
MANUFACTURING DRAWING	
CUSTOMER REFERENCE	
ORIGINAL RELEASE DATE 052715	

THIS DRAWING CONFORMS TO ASME Y14.5-2009 AND SHAW DEVELOPMENT ES-2030

THIRD ANGLE PROJECTION

Shaw Development
25190 Bernwood Drive
Bonita Springs, Fl. 34135
WWW.SHAWDEV.COM

TITLE: NUT, WELD, SS, M8 X 1.25

CODE IDENT NO.	SIZE	DRAWING NO.	REVISION
59647	A	999-0859-M8X125	A

DRAWING STATE	Released	SHEET 1 OF 1