DRAWING NO. 908-0405-16 REV. B

REVISIONS						
RELEASE	LTR	DESCRIPTION	DRAWN/REV. BY	ENGINEER	DATE	APPROVALS ON FILE
EC0067	B	ASTM A420 WAS ASTM A276	J. BEADLES	J. KOONCE	06-Sep-2017	

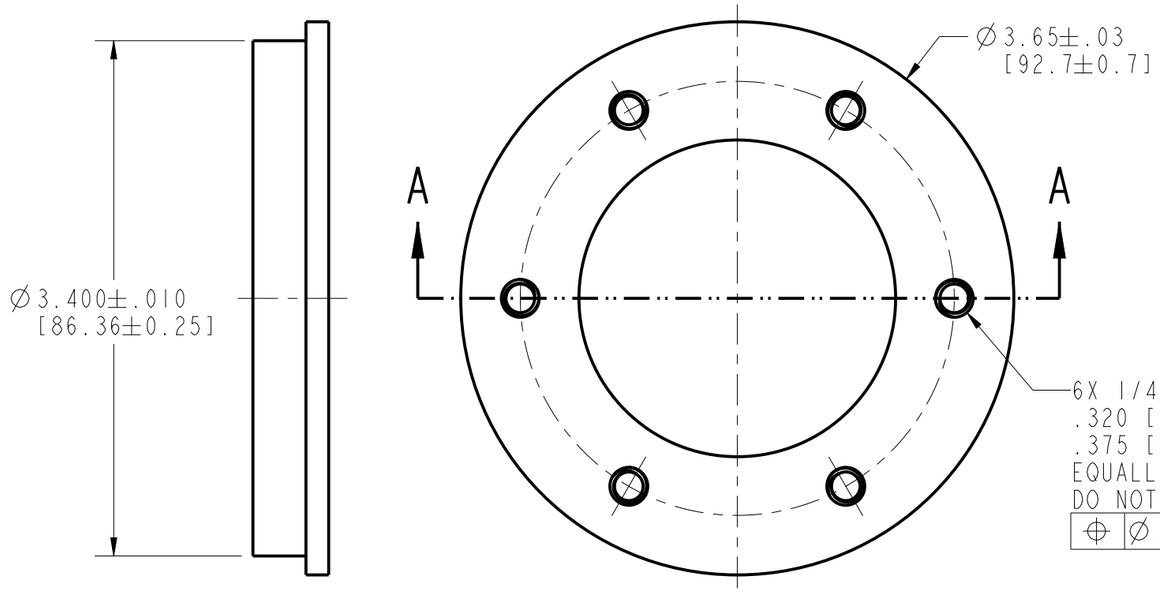

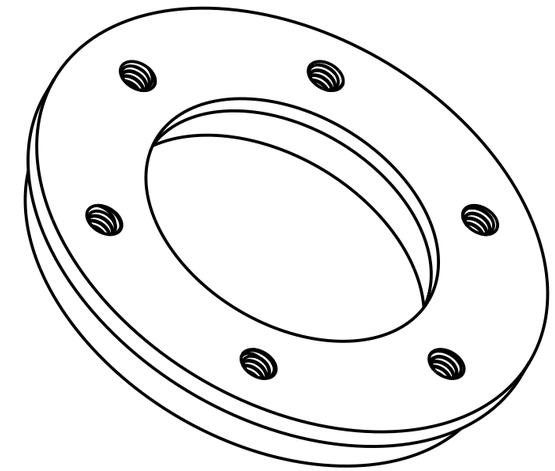

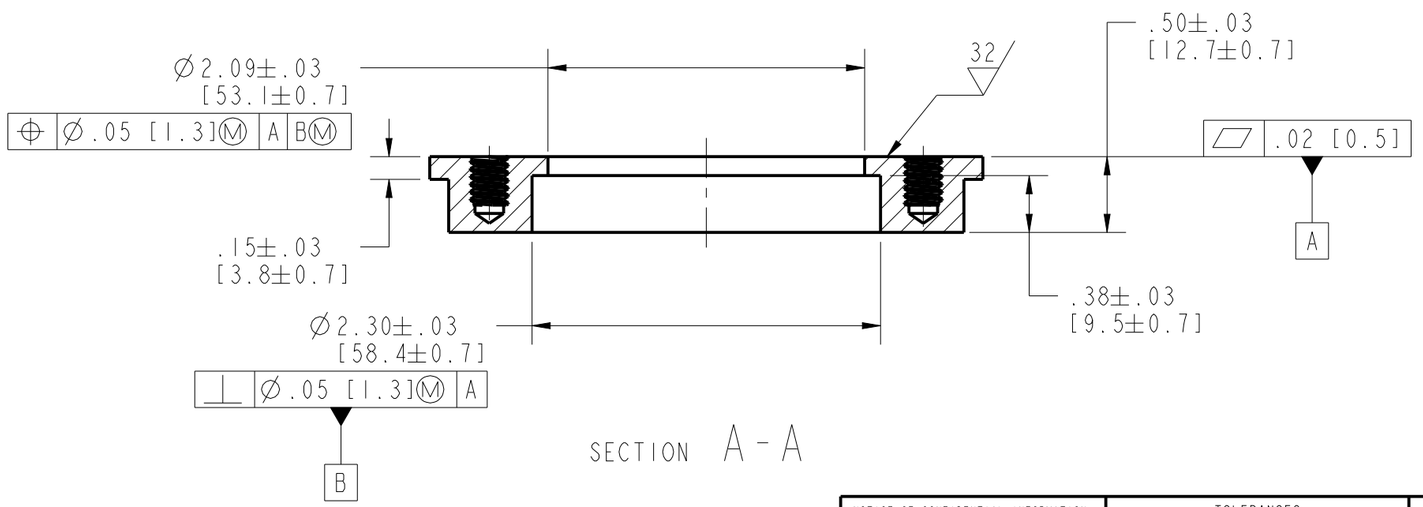

SECTION A-A

NOTES:

1. MATERIAL: STAINLESS_STEEL-304L OR 316L PER ASTM A240 Ⓑ
2. FINISH: NONE
   FINISH SPEC: NONE
3. COLOR: NONE
   COLOR SPEC: NONE
4. WEIGHT: 0.8 lbs.
5. REMOVE ALL BURRS & SHARP EDGES
6. UNLESS OTERWISE SPECIFIED, BLOCK TOLERANCES DO NOT APPLY TO REFERENCE DIMENSIONS.

NOTICE OF CONFIDENTIAL INFORMATION AND PROPRIETARY RIGHTS:
THIS DOCUMENT MAY NOT BE DISCLOSED TO OTHERS EXCEPT BY EXPRESS WRITTEN PERMISSION OF SHAW DEVELOPMENT, LLC.
THIS DOCUMENT CONTAINS CONFIDENTIAL COMMERCIAL AND TECHNICAL DATA, CONCEPTS AND OTHER INFORMATION, ALL OF WHICH ARE PROPRIETARY AND OF ECONOMIC VALUE TO SHAW DEVELOPMENT, LLC.
THIS DOCUMENT MAY NOT BE USED FOR MANUFACTURE OR PROCESSING USES ABSENT EXPRESS WRITTEN PERMISSION OF SHAW DEVELOPMENT, LLC.
ANY USE OTHER THAN CONFIDENTIAL EVALUATION IS STRICTLY PROHIBITED WITHOUT THE PRIOR WRITTEN CONSENT OF SHAW DEVELOPMENT, LLC.
© 2017 Shaw Development, LLC.
All rights reserved.

TOLERANCES (UNLESS OTHERWISE NOTED)

DECIMALS	ANGLES	MM
.XX ±.030	±1/2°	.X ±.76
.XXX ±.010		.XX ±.254

REMOVE ALL BURRS AND SHARP EDGES TO .010 R MAX.

MACHINED SURFACES SHALL HAVE A 125 MICRO-FINISH OR BETTER.

UNLESS OTHERWISE SPECIFIED: DIMENSIONS ARE IN INCHES.

DIMENSIONS DESIGNATED [XX] ARE IN MILLIMETERS.

DRAWING SCALE: 1.000 SHOWN FOR REFERENCE ONLY DO NOT SCALE DRAWING

NEXT ASSY 908-1306-01 | E-JOB 2884

MANUFACTURING DRAWING

CUSTOMER REFERENCE

ORIGINAL RELEASE DATE 06-Oct-2014

THIS DRAWING CONFORMS TO ASME Y14.5-2009 AND SHAW DEVELOPMENT ES-2030

THIRD ANGLE PROJECTION

SHAW DEVELOPMENT
25190 Bernwood Dr., Bonita Springs, Florida 34135 WWW.SHAWDEV.COM

TITLE: BOLT FLANGE

CODE IDENT NO.	SIZE	DRAWING NO.	REVISION
59647	B	908-0405-16	B

DRAWING STATE: Released | SHEET 1 OF 1